DEPARTMENT OF SCIENTIFIC AND INDUSTRIAL RESEARCH

AND

FIRE OFFICES' COMMITTEE

JOINT FIRE RESEARCH ORGANIZATION

# FIRE RESEARCH NOTE

NO. 519

## CONTROL OF FIRES IN LARGE SPACES WITH INERT GAS AND FOAM PRODUCED BY A TURBO-JET ENGINE

## VII - THE SELECTION OF FOAMING AGENTS FOR THE PRODUCTION OF HIGH EXPANSION FOAM

by

B. LANGFORD AND G. W. V. STARK



February, 1964.

Fire Research Station.
Boreham Wood.
Herts.
('phone ELStree 1341)

F.R. Note No.519.

DEPARTMENT OF SCIENTIFIC AND INDUSTRIAL RESEARCH AND FIRE OFFICES' COMMITTEE
JOINT FIRE RESEARCH ORGANIZATION

# CONTROL OF FIRES IN LARGE SPACES WITH INERT GAS AND FOAM PRODUCED BY A TURBO-JET ENGINE

## VII - THE SELECTION OF FOAMING AGENTS FOR THE PRODUCTION OF HIGH EXPANSION FOAM

by

B. Langford and G. W. V. Stark

Summary

The properties required of high expansion foam, produced with inert gases from a jet engine generator are: (1) a slow drainage rate and (2) a slow rate of collapse, at temperatures above ambient. Three tests permit the performance of foaming agents to be assessed. A single film drainage test indicated unsuitable materials. Two tests using a system of foam generation similar to the full scale system were used to select the most suitable foaming agents from those not rejected by the first test. These were a test of the rate of collapse of foam in a tank measuring 3 ft 6 in x 2 ft 9 in x 2 ft 3 in, and a test of the rate of drainage of liquid from a plug of foam contained in a cylinder 12 ft long and 1 ft 8 in diameter. Of 30 foaming agents examined, ammonium lauryl sulphate was the best.

# CONTROL OF FIRES IN LARGE SPACES WITH INERT GAS AND FOAM PRODUCED BY A TURBO-JET ENGINE

## VII - THE SELECTION OF FOAMING AGENTS FOR THE PRODUCTION OF HIGH EXPANSION FOAM

by

B. Langford and G. W. V. Stark

### INTRODUCTION

The use of high-expansion foam for fire-fighting is an established technique(1). In the method of foam production using the jet engine inert gas generator, the exhaust gases from the engine, cooled by the injection of water spray, are used to produce high expansion foam by passing them through a mesh fabric screen which is constantly being sprayed with a solution of foaming agent. The properties required of the foams produced from the jet engine generator are similar to those for high expansion foams generated by other systems, namely, high stability of the foam mass and low drainage rate of liquid from the foam mass and these properties must be retained at the elevated temperature of the exhaust gases. These two properties determine the capacity of the foam to effectively transport water and inert gas to the seat of the fire, which may be remote from the point of generation.

### EXPERIMENTAL

Because of the large number of foaming agents available commercially, an attempt was made to select suitable agents by a simple laboratory test involving small quantities of material. The apparatus used was that devised by the Safety in Mines Research Establishment of Buxton(2), and is shown in Fig.1. It consisted of a blackened perspex box, 5 in$^3$ (12.7 cm$^3$), with an airtight lid. A light metal frame 1.5 in x 2.5 in (3.8 cm x 6.35 cm) was hinged so that it could lie horizontally along the bottom of the box and be raised magnetically to the 45° position. The box was light-tight except for a sight hole in the lid and an illuminated aperture in the side along which the frame was hinged. The drainage rate of a single film was measured by observing the rate of descent of the band of total light transmission, the black band, down the film retained by the frame. For these observations a sufficient quantity of agent solution, containing 1 per cent concentration of active matter, to cover the horizontal frame was put in the box. The lid was replaced and the apparatus left to allow saturation of the atmosphere in the box. The frame retaining a film of solution, was then raised carefully into the 45° position. Observations were made of the rate of descent of the black band, through the sight hole in the lid of the box and the time of descent to the half way position was recorded. A slow descent indicated a strong stable film. The results from this test were used to reject agents giving unstable films. This test is referred to later as the single film test.

Compounds which showed promise in this test were next examined on a pilot scale using a 6 in (15 cm) generator of the kind described elsewhere(3). This apparatus was modified by replacing the cotton mesh foam-making screen by one of a terylene mesh, the former having proved unsatisfactory in large scale tests(4). Terylene mesh material of a similar weave to the cotton it replaced was found to have a similar foam making performance. Using this foam generator, the following tests were carried out.

Foam stability was estimated by generating foam into a tank 3 ft 6 in x 2 ft 9 in x 2 ft 3 in (107 x 84 x 69 cm), of 135 gal (620 l) capacity and measuring the time of collapse of the foam to half its original volume. This

value is referred to as the "half-life" of the foam. A large volume of foam was used in this test to reduce wall effects and to approach the condition of full scale foam production.

An attempt was made to devise a pilot scale apparatus to measure drainage rates from a foam plug travelling over measured distances. This consisted of a 6 in (15.2 cm) square cross-section duct, 25 ft (760 cm) long with trapdoors at intervals along the floor, Fig.2. The trapdoors normally lay in the "closed" position allowing the plug to pass along the duct. When "open" the trapdoors deflected the whole of the plug which was collected in a light, weighed bin. After successively filling each of the bins and re-weighing, the values of expansion ratios of the foam at each position were obtained, enabling an estimation to be made of the rate of drainage of solution from the foam during its travel along the duct. In practice this method was incapable of good separation of successive values of expansion ratios in the length of duct used, 25 ft (760 cm), because of the rapid progress of the plug along the duct, and the measurements were not proceeded with.

A simpler test of the rate of drainage of liquid from a static foam plug was therefore adopted. The apparatus, Fig.3, consisted of a fibreglass reinforced plastics cylinder 1 ft 8 in (51 cm) diameter and 12 ft (366 cm) long. The 6 in (15 cm) generator was arranged to pass a foam plug into this cylinder. The cylinder sloped down slightly to the open end. A drain hole was provided in the cylinder at A, Fig.3, to allow any excess liquid passing the foam screen to escape. A second drain hole, B Fig.3, was provided at the open end of the cylinder. Tests were made by generating foam until the cylinder was completely filled, when generation was stopped. From this time, draining liquid was collected at B and the rate of drainage measured. The time for half of the liquid contained in the freshly generated foam to drain, called the "half drainage time", was used to compare the retention of water by foams made with different foaming agents.

The quality of foam produced by a foaming agent may be improved by the addition of certain materials, one of the effects of which is to increase the viscosity of the foaming solution. The effect of two additives was examined with two of the foaming agents. The same two agents were used also to examine the effect of elevated gas temperatures on the drainage and break-down rates of the resultant foam.

## RESULTS

In all tests the solution concentrations were kept constant at 1 per cent of active content of agent. The gas flow for the tests using the small scale generator was 1,600 l/min (56.5 c.f.m.) air, giving a linear exit velocity of 150 cm/s (4.95 ft/s) and the solution was applied at 1.6 l/min (0.35 gal/min), giving a nominal expansion ratio of 1000:1.

### Single Film Test

Thirty agents were tested on the laboratory scale apparatus. Eight of these were selected as having a sufficiently slow drainage rate and high film stability to warrant further examination on the pilot scale. The results for the selected agents are listed in Table 1 below. Compounds with lower values than 6m were rejected as having little prospect of satisfactory performance on the larger scale.

Table 1

Laboratory scale values of film stabilities

| No. | Chemical nature of agent* | Time of descent of black band to mid-point |
|---|---|---|
| 1 | Blend of sodium dodecyl benzene sulphonate with non-ionic components | 7m 57s |
| 2 | Ethylene oxide condensate of sodium lauryl sulphate | 12m 15s |
| 3 | Sodium lauryl di-ethylene glycol ether sulphate | 6m 03s |
| 4 | Blended sulphated fatty alcohols | 15m 41s |
| 5 | Sodium lauryl ether sulphate | 23m 30s |
| 6 | Sodium alkyl naphthalene sulphate | 10m 53s |
| 7 | Emulsifying agent (composition not given) | 9m 30s |
| 8 | Ammonium lauryl sulphate | 16m 30s |

*These names are given either by the makers or are quoted from the "Dictionary of British Surface Active Agents", Manufacturing Chemist, April 1962 - September 1962.

Test of foam "half-life"

Of the compounds in Table 1, all but No.7 were examined in the test to determine the half-life of the foam in the 135 g (620 l) tank. These results are shown in Table 2.

Table 2

Half-life measurements of selected agents

| No. | Chemical nature of agent | Half-life |
|---|---|---|
| 1 | Blend of sodium dodecyl benzene sulphonate with non-ionic components | 7m 45s |
| 2 | Ethylene oxide condensate of sodium lauryl sulphate | 16m 30s |
| 3 | Sodium lauryl di-ethylene glycol either sulphate | 60m 15s |
| 4 | Blended sulphated fatty alcohols | 33m 15s |
| 5 | Sodium lauryl ether sulphate | 35m 45s |
| 6 | Sodium alkyl naphthalene sulphonate | 16m 20s |
| 8 | Ammonium lauryl sulphate | 103m 00s |

These values give a good indication of the "half-life" of a large volume of foam as generated on the full-scale. The measured "half-life" for a mass of foam generated by agent No.1 in a test with the J.F.R.O. jet engine inert gas and foam generator(3) was 8 min, compared to the value in Table 2 of 7m 45s.

Drainage Rate

Attempts were made to improve, i.e. decrease the drainage rate, of agent No.1 by the addition of up to 2 per cent on the solution of foaming agent of sodium tri-poly-phosphate or of a water soluble ethyl-hydroxy cellulose. These two additives did not have a sufficiently advantageous effect on the drainage rate to warrant further enquiry at this stage. Because of this the agents available were examined without additives.

The majority of agents examined showed very similar characteristics when a graph of the drainage rate was plotted. The results for sodium lauryl di-ethylene glycol ether sulphate, being typical, are shown in Fig.4. From this it is seen that the half drainage time is 90s. The best agent as far as drainage rate was concerned was agent No.8 (ammonium lauryl sulphate) and the graph for this agent is shown in Fig.5. The half-drainage time was 12 min approximately.

Finally, a study was made in the same apparatus of the effect of elevated temperatures upon the drainage rates of compounds numbers 1 and 8 in the tables. These were referred to as compounds A and C in an earlier report*(3). The gas passing through the foam screen was heated by placing a gas burner on the inlet side of the centrifugal air blower. The maximum temperature of the gas stream attained in this way was 70°C. This is greater than the maximum temperature of gas normally used in full scale tests, with the jet engine inert gas generator.

Figure 6 shows a family of curves for the effect of temperature on the drainage rates of agent No.1 (sodium dodecyl benzene sulphonate). The "half drainage time" decreased from 2 min 48s to 1 min 06s for a range of temperatures from ambient to 70°C. Figure 7 shows a similar family of curves for agent No.8 (ammonium lauryl sulphate). The effect of increased temperature is relatively much greater on the latter, the "half drainage time" being decreased from 10 min at ambient temperature, to 2 min 12s at 70°C. However, the "half drainage time" was still superior at elevated temperatures to those for other agents at ambient temperatures.

## DISCUSSION AND CONCLUSIONS

The work described has indicated, e.g. Table 1, that a small laboratory scale single film apparatus can only be used to eliminate agents which are most likely to prove inefficient on the full scale apparatus. It cannot be used to select the agents most likely to be effective.

The tests carried out in the 135 gal (620 l) tank indicated that a good estimate of the stability of foam in the mass could be made on this scale and there was a good correlation between the results in this test and on the full scale.

---

*In the report mentioned above it was stated that compound C was unsuitable because of incompatibility with hard water. This has since proved to be false; the poor performance on that occasion was due to low temperatures affecting the properties of the solution.

A more complete measure of an agent's suitability was demonstrated in the large diameter duct. From the results of these tests the stability and the water carrying capacity of the different foams examined could be assessed.

Of ten agents tested, ammonium lauryl sulphate had the best overall performance in the tests of "half drainage time" and "half life".

When the comparison was made of the effect of increased temperatures on foaming agents, the ammonium lauryl sulphate suffered relatively more severely in respect of "half drainage time" but was still superior in absolute terms. As ammonium lauryl sulphate formed a stable foam even at high temperatures and had the best liquid transporting properties of the ten agents examined, it was selected as the most suitable agent for full scale testing to be described in a later report(4).

It is therefore concluded that the foam "half-life" and "half drainage time", measured as described in this note may be used to select satisfactory foaming agents for producing high expansion foam for fire-fighting.

Acknowledgments

The authors wish to thank Mr. A. Lange for help in carrying out the experimental work.

References

(1) EISNER, H. S. and SMITH, P. B. (1956) Fire fighting in underground roadways: experiments with foam plugs. Safety in Mines Research Establishment Research Report No.130, June 1956.

(2) THOMPSON, W. Measurement of drainage rate of high-expansion foams. Journal of Applied Chemistry 1962, Vol. 12, Pt.1, p.12.

(3) LANGFORD, B., STARK, G. W. V. and RASBASH, D. J. The production of high expansion foam. F.R. Note No.511.

(4) LANGFORD, B. and STARK, G. W. V. Control of Fires in Large Spaces with Inert Gas and Foam Produced by a Turbo-Jet Engine (10) A comparative study of high expansion foam produced with air and with the Joint Fire Research Organization Inert Gas and Foam Generator. (In preparation).

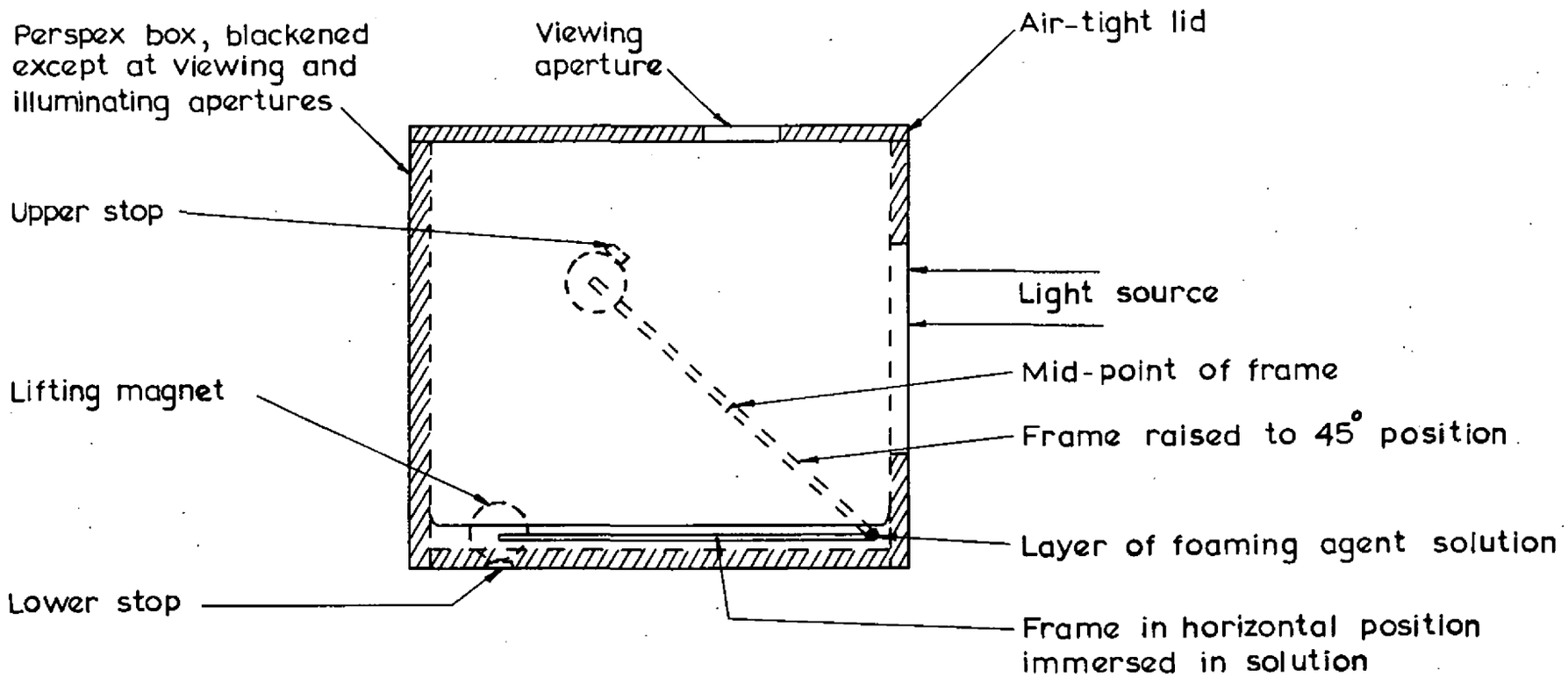


FIG.1. SINGLE FILM LIGHT TRANSMISSION APPARATUS

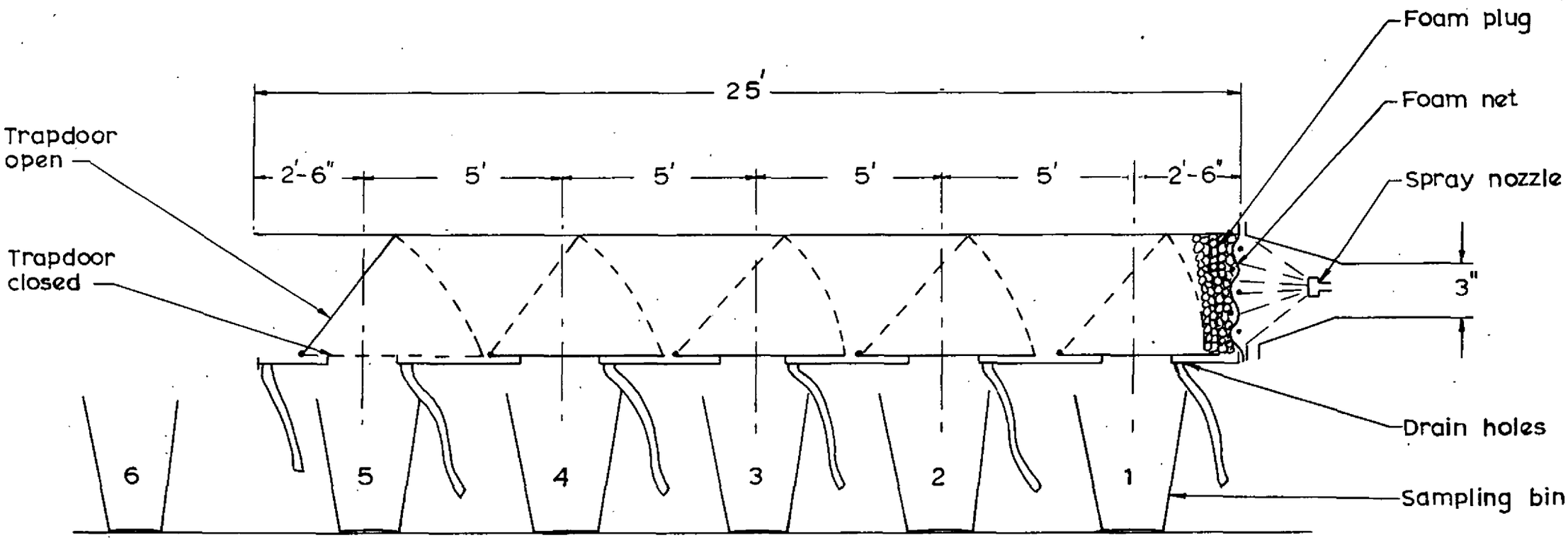


FIG. 2. RECTANGULAR FOAM DRAINAGE DUCT

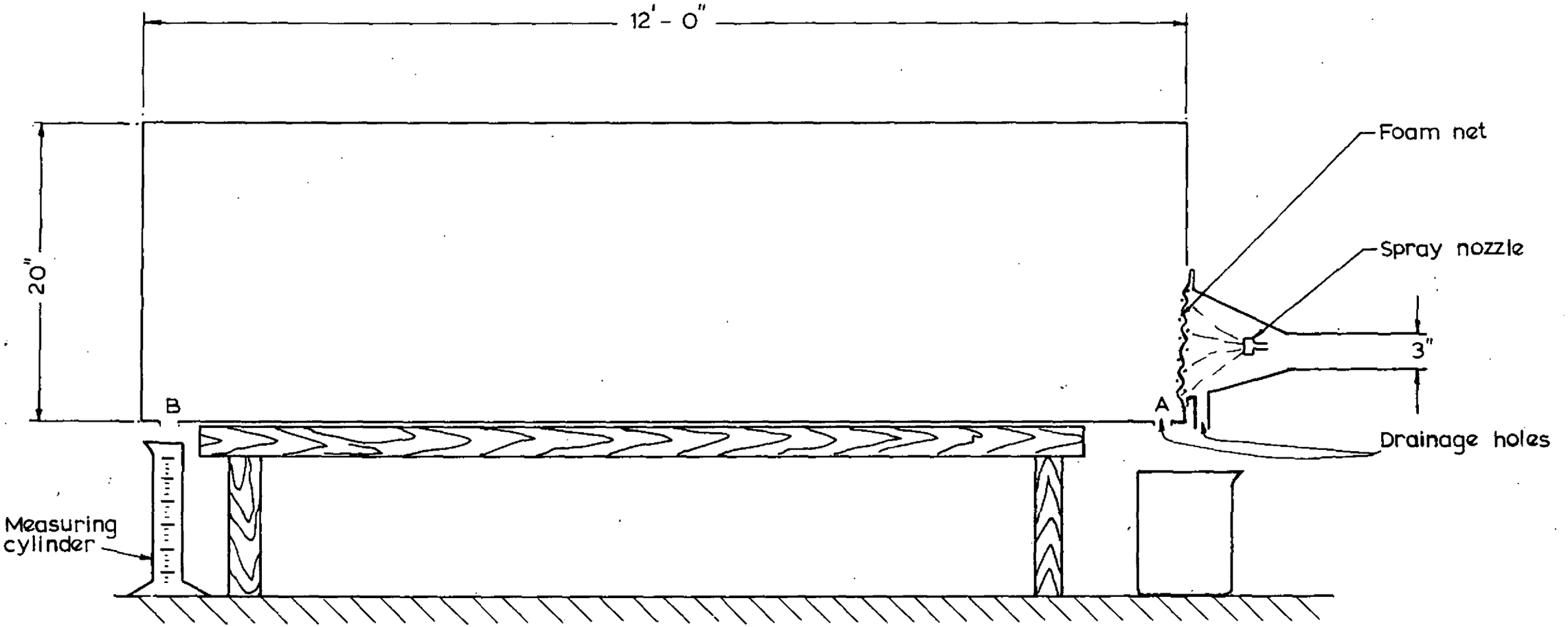


FIG.3. CYLINDRICAL FOAM DRAINAGE DUCT

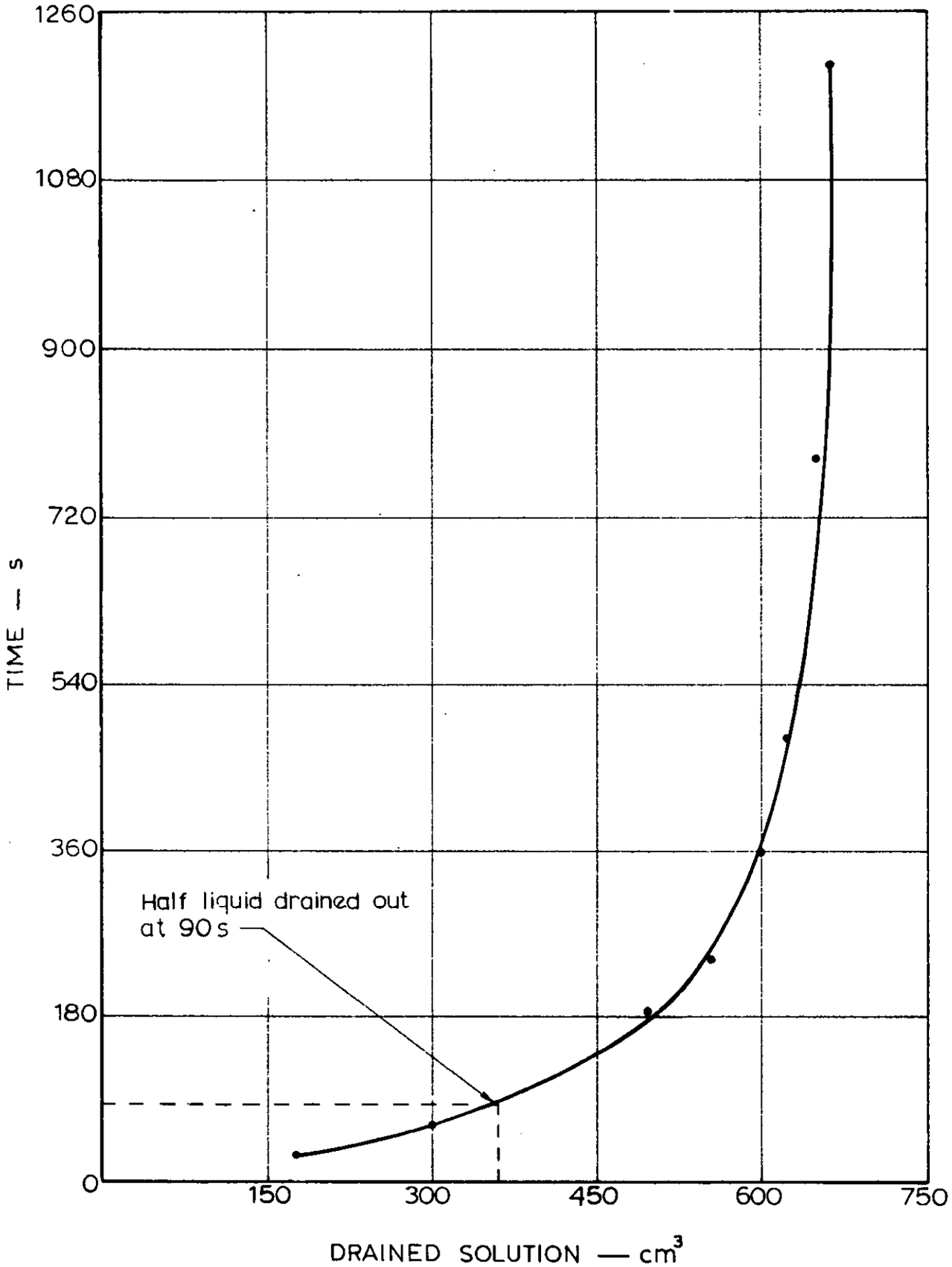


FIG.4. RATE OF DRAINAGE. SOLUTION OF SODIUM LAURYL DI-ETHYLENE GLYCOL ETHER SULPHATE (1% ACTIVE CONTENT)

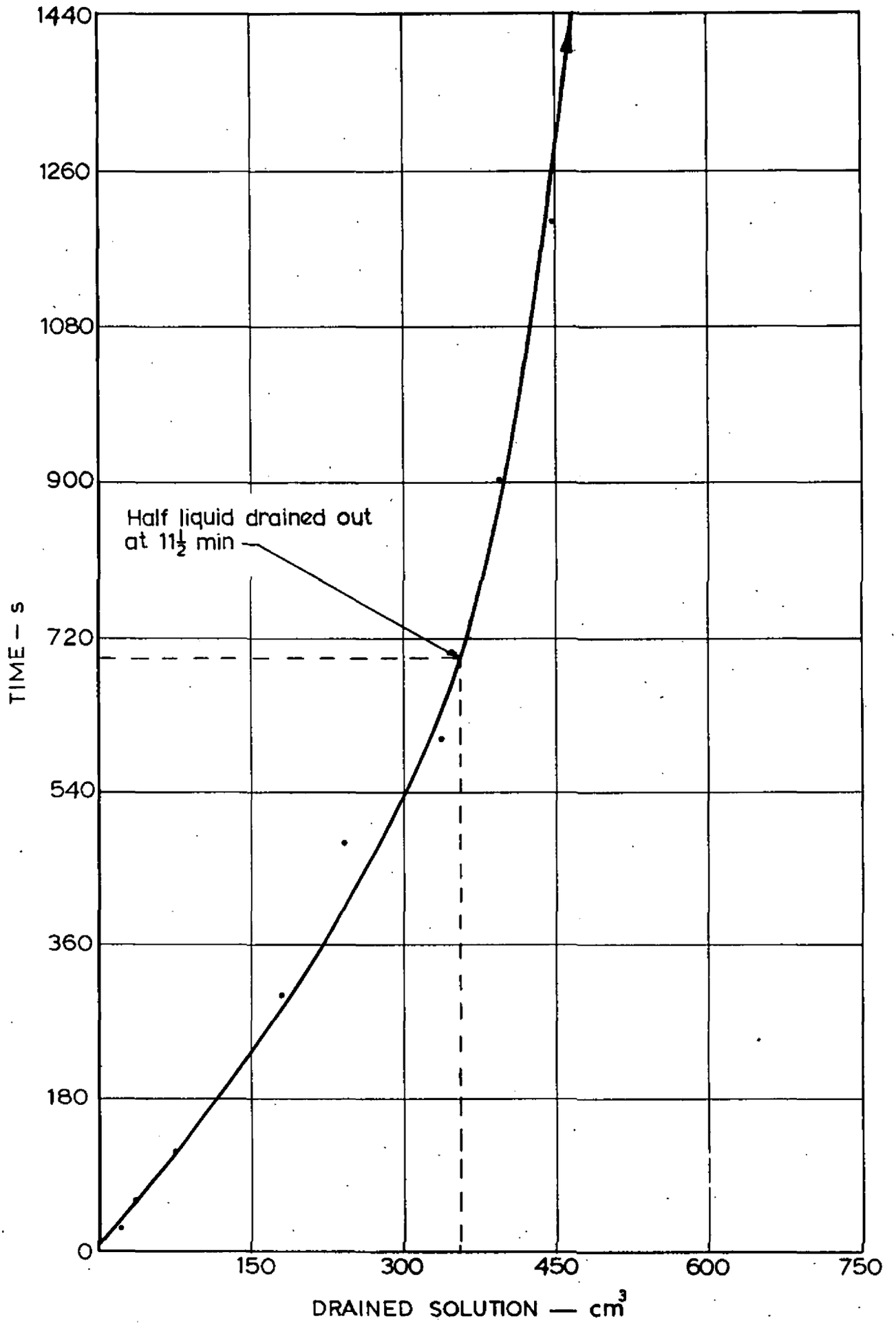


FIG.5. RATE OF DRAINAGE. SOLUTION OF AMMONIUM LAURYL SULPHATE (1% ACTIVE CONTENT)

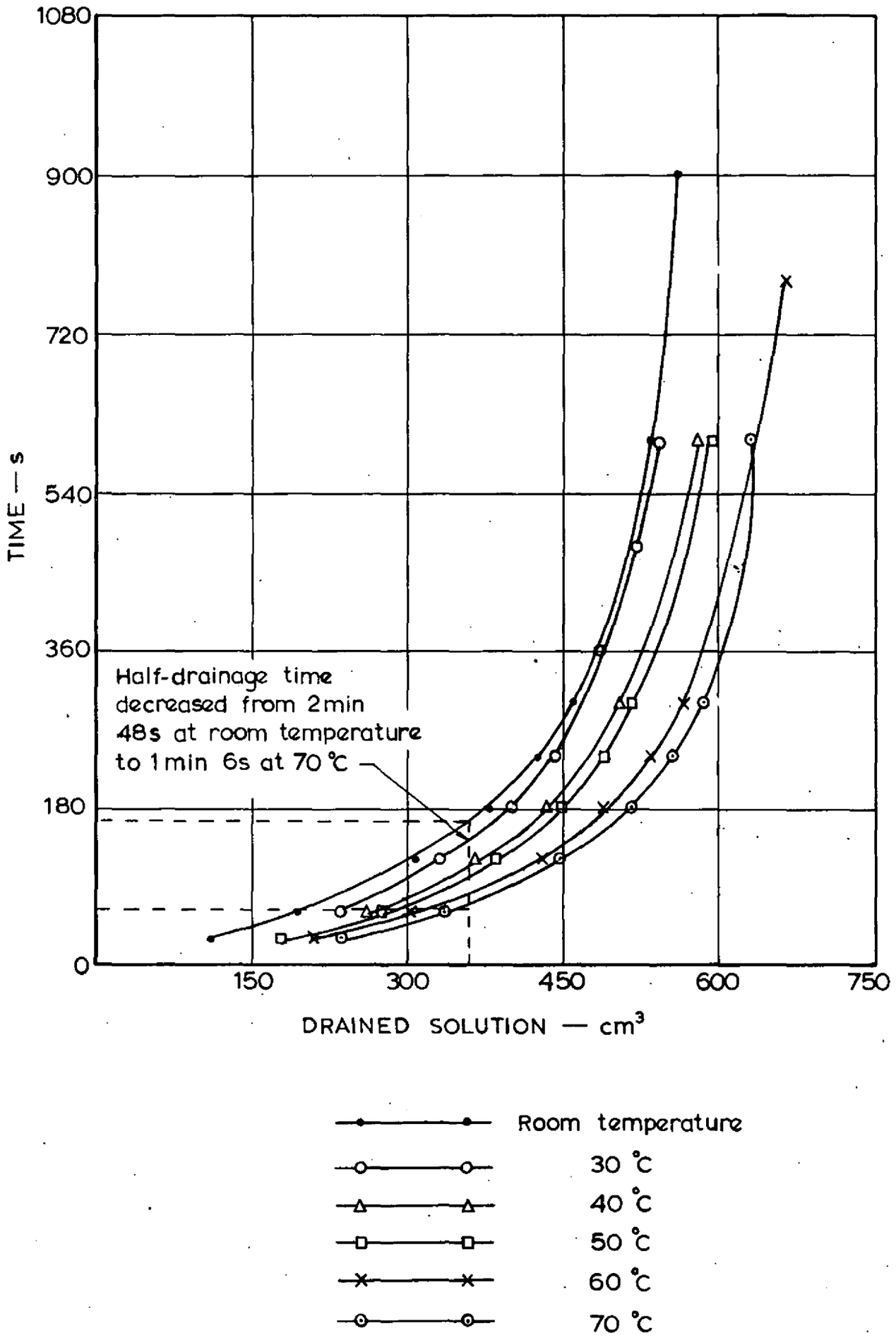


FIG.6. EFFECT OF ELEVATED TEMPERATURES ON RATE OF DRAINAGE. SOLUTION OF BLEND OF SODIUM DODECYL BEZENE SULPHONATE WITH NON-IONIC COMPONENTS (1% ACTIVE CONTENT)

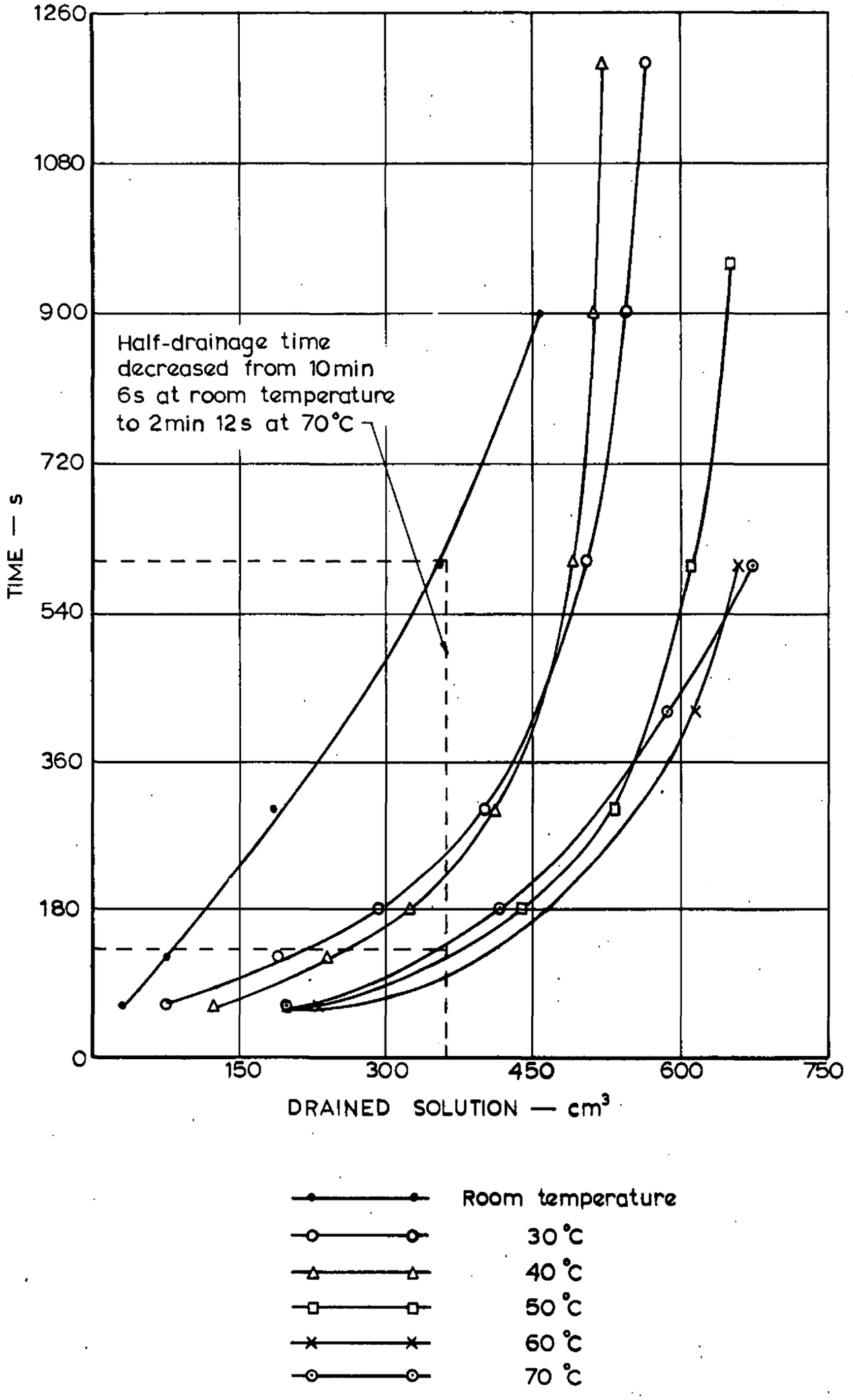


FIG.7. EFFECT OF ELEVATED TEMPERATURES ON RATE OF DRAINAGE. SOLUTION OF AMMONIUM LAURYL SULPHATE (1% ACTIVE CONTENT)