The Fire-Resistance of No-Fines Concrete Walls

By L. A. Ashton, B.Sc.(Eng.)
and R. H. Bigmore, B.Sc.(Eng.)

Reprinted from
CIVIL ENGINEERING AND PUBLIC WORKS REVIEW
8 Buckingham Street, Strand, London, W.C.2
June, July and August, 1954

The Fire-Resistance of No-Fines Concrete Walls*

By L. A. Ashton, B.Sc.(Eng.) and R. H. Bigmore, B.Sc.(Eng.)

NON-LOADBEARING WALLS OF HEAVYWEIGHT AGGREGATE

NO-FINES concrete, an open textured material made from coarse aggregate, cement and water, is used for loadbearing and non-loadbearing walls of buildings, mainly of the domestic dwelling type. Since it can be poured from a considerable height without segregating and exerts a relatively low hydrostatic pressure on formwork, it has been found very suitable for monolithic walls, but it is also used for making precast blocks. Owing to its open texture no-fines concrete requires rendering and provides an excellent key for the plaster.

Although no-fines concrete was used as early as the nineteen-twenties, its possibilities were not fully investigated until the shortages of the post-war period stimulated interest in forms of construction which economised in building materials. Results of research work on its physical properties and constructional application have been published in recent years, but data on its behaviour at high temperatures appear to be lacking.

The tests described were carried out to measure the fire-resistance, as defined by British Standard 476: 1932, of non-loadbearing walls of no-fines concrete. Both monolithic and block constructions were tested, each made from two different aggregates, representative of high and low silica content rocks. All the walls were 6in thick and rendered on both faces. Fire-resistances varying from $3\frac{1}{4}$ to 6 hours were obtained, comparing favourably with the performance of alternative forms of non-loadbearing walls of the same thickness. The walls made from the aggregate of low silica content gave the greater fire-resistance, as they did not suffer the severe structural failure which occurred in the high silica aggregate walls after prolonged heating.

The investigation was made following a request for information on the fire-resistance of no-fines concrete from the Commonwealth Experimental Building Station, Australia. A programme of tests was planned to include both loadbearing and non-loadbearing walls in various representative aggregates; this report gives the results of tests on non-loadbearing walls made from basalt and from quartzite aggregates.

Materials Used for Test Specimens

CONCRETE

Cement. The cement used throughout was Rapid-hardening Portland Cement manufactured to British Standard 12: 1947. The term "Rapid-hardening" is synonymous with "High early strength" which is used in other countries.

Aggregates. Two rock types were chosen as representative of the extremes of the ranges of silica content encountered in the commonly used natural aggregates, quartzite, which has a high silica content and a relatively large thermal expansion, and basalt, which is a low silica rock with a relatively small thermal expansion. The size and shape of the aggregate particles are important for making good no-fines concrete. A typical specification (1)† states: —

"The aggregate shall all pass a sieve having openings $\frac{3}{4}$in square and not more than 5 per cent by weight shall pass a sieve having openings $\frac{3}{8}$in square. Pieces shall be clean, hard, strong, durable, preferably rounded or near-cubicle and free from any coating of dust, clay or organic matter. Aggregates containing soft, friable, thin, flaky, elongated or laminated pieces totalling more than 10 per cent by weight, or shale in excess of $1\frac{1}{2}$ per cent by weight, shall not be used."

In the specification quoted, terms such as "thin, fla gated" are not defined quantitatively. If the definitions terms are taken to be those given in British Standard 8 *Sampling and testing of mineral aggregates, sand and fi* above specification is so severe that it is extremely unli aggregates would be obtainable in Great Britain to comply this relates particularly to basalt, which owing to its structure, yields a rather flaky aggregate when crushed.

After many enquiries, quarries were found which wer supply aggregates approaching the requirements of the spec The quartzite had an excellent shape, and the basalt, althou was considered suitable for the purpose. Two separate deli each rock were obtained which, although from the same and to the same nominal specification, varied slightly as s the analyses in Table I. Photographs of typical samples of aggregates are shown in Fig. 1.

Water. Clean tap water was used for gauging the

RENDERINGS

(i) A pit sand having 98 per cent passing No. 7 sieve v for rendering.

(ii) The cement was Rapid-hardening Portland Cement tc Standard 12: 1947.

(iii) The hydrated lime used was run to putty at least 2 before gauging.

(iv) Clean tap water was used for gauging.

Description of Specimens and Method of Manu

The following four specimen walls were made, each 10ft × 6in thick and rendered $\frac{1}{2}$in thick on both faces: —

1. Monolithic wall in crushed quartzite aggregate.
2. Block wall in crushed quartzite aggregate.
3. Monolithic wall in crushed basalt aggregate.
4. Block wall in crushed basalt aggregate.

The concrete mix for all specimens was 1: 8 by cement: aggregate. Mixing was carried out in a $4\frac{1}{2}$ft^3 op

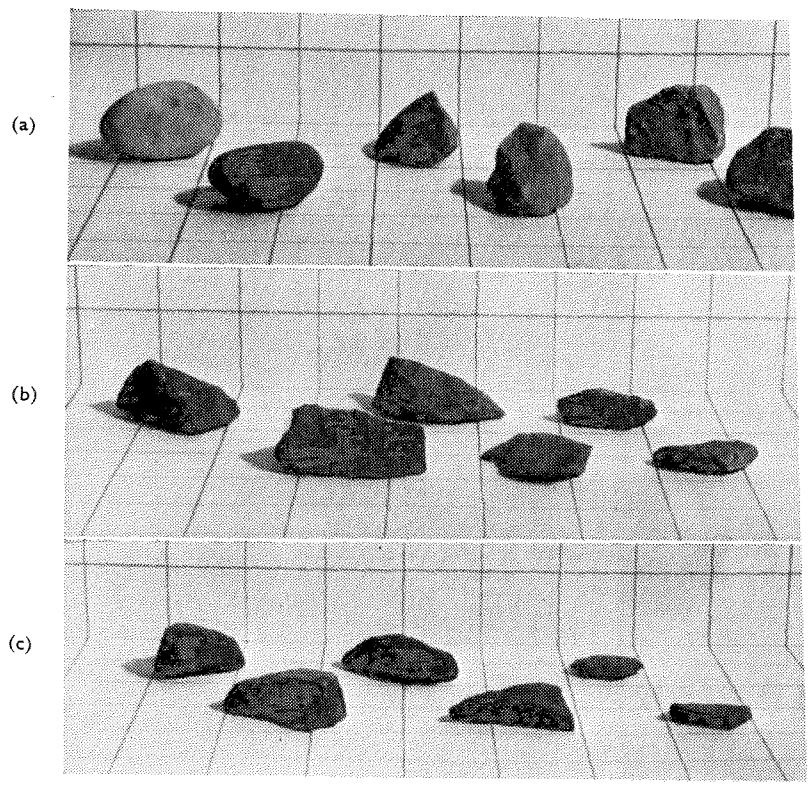

Fig. 1. Typical samples of aggregates shown on a $\frac{3}{4}$in grid. The sa are: (a) crushed quartzite gravel; (b) crushed basalt, batch No. 1; a crushed basalt, batch No. 2.

* *Crown Copyright Reserved.*

† *The figures in parentheses refer to the bibliography which follows the article.*

TABLE

CONTROL OF CONCRETE MIXING AND ANALYSES OF AGGREGATES

Specimen	Water-cement ratio by weight	Cubes		Age (days)	Batch	Analyses of Aggregates			
		Average Density lb/ft³	Average Strength lb/ft³			Percentage Sieve Analysis	Flakiness Index per cent	Bulk Density lb/ft³	Voids ratio per cer
1. Monolithic construction in crushed quartzite gravel	Mean value = .462 Standard deviation = .0763	113.4	957	7	2	Total weight of dry sample— 3,920 g Passing ¾ in—98.8 ,, ½ in—17.1 ,, ⅜ in— 1.0	19.5	Compacted 98½	Compac 39.5
	Max. value = .595 Min. value = .355	113.1	1389	28				Loose 91¼	Loose 44.0
2. Block construction in crushed quartzite gravel	Mean value = .377 Standard deviation = .0396	112.3	1022.3	7	1	Total weight of dry sample— 13,500 g Passing ¾ in—98.2 ,, ½ in— 4.2 ,, ⅜ in— .4	13		
	Max. value = .432 Min. value = .300	111.3	1534.7	28					
3. Monolithic construction in crushed basalt	Mean value = .475 Standard deviation = .0424	115.8	933	7	2	Total weight of dry sample— 9,292 g Passing ¾ in—100 ,, ½ in—54 ,, ⅜ in— 5 8	28.5	Compacted 94½	Compac 43.4
	Max. value = .595 Min. value = .418	115.4	1391	28				Loose 87	Loose 47.2
4. Block construction in crushed basalt	Mean value = .434 Standard deviation = .0397	114.0	880	7	1	Total weight of dry sample— 12,816 g Passing ¾ in—100 ,, ½ in—14.9 ,, ⅜ in— 1.9	29	Compacted 95¼	Compac 43.7
	Max. value = .55 Min. value = .372	113.7	975	28				Loose 89	Loose 47.4

mixer, adopting the following procedure. The bulk of the aggregate was first saturated with water and as each batch was placed in the mixer a sample was taken for determination of the moisture content. After adding the cement by sprinkling on to the aggregate, the weight of water required to give the particles the appearance of being evenly coated with cement paste was noted. Mixing was continued for at least two minutes for all batches.

The concrete was sampled at frequent intervals for making 6in cubes, 6in dia × 12in cylinders (having the tops capped with neat cement mortar) and 4in × 4in × 16in beams. These were tested in the standard manner after maturing under the same conditions as the corresponding walls; results are given in Table I. The walls were constructed in the 10ft square opening of the heavily reinforced refractory concrete frame shown in Fig. 2, which gave a high degree of restraint at the edges.

Monolithic walls were cast in the frame using shuttering in 3ft lifts. The 1ft space at the top, which was necessary for placing the concrete, was subsequently filled with a precast slab of the same composition and thickness as the main body of the wall. Construction proceeded continuously; placing of the concrete was assisted by a light steel rod without compaction. Shuttering was struck three days after casting and the walls allowed to dry naturally in the Test Building.

The blocks, which had the shape and dimensions shown in Fig. 3, were cast in multiple moulds and were covered with wet sacks until demoulding after three days. In laying the blocks a 1 : 1 : 6 cement : lime : sand mortar was used in the horizontal joints only and the mortar bed was interrupted by the recess in the block. No mortar was placed in the vertical joints formed by the gaps between the ends of the blocks. This method of construction is designed to prevent moisture penetration by capillary action. One half-block was included in each course to break the vertical joints.

A ½in thick rendering of 1 : 1 : 6 cement : lime : sand was applied to each face of both monolithic and block walls by a skilled tradesman. The rendering was in two coats, the first being a blinding coat. Fig. 4 shows the rendering in progress on a block wall.

Test Conditions and Requirements

Fire-resistance is defined in British Standard 476, which specifies the methods of test applicable to the various types of structural element. The test is of the full-scale type and for "separating" elements of structure, such as walls, which are required to resist the spread of a fire beyond the compartment of origin, the specimen element, when subjected to standard fire conditi must fulfil certain requirements of integrity and insulation. tests were made in accordance with the British Standard curren the time, No. 476: 1932, which also specified for non-loadbea walls an impact test and, for heatings of 2 hr or more duratio water jet test.

In the revised edition now in force, No. 476: 1953, s alterations have been introduced, notably the omission of the im and water jet tests. Reference to other publications (2) (3) ca

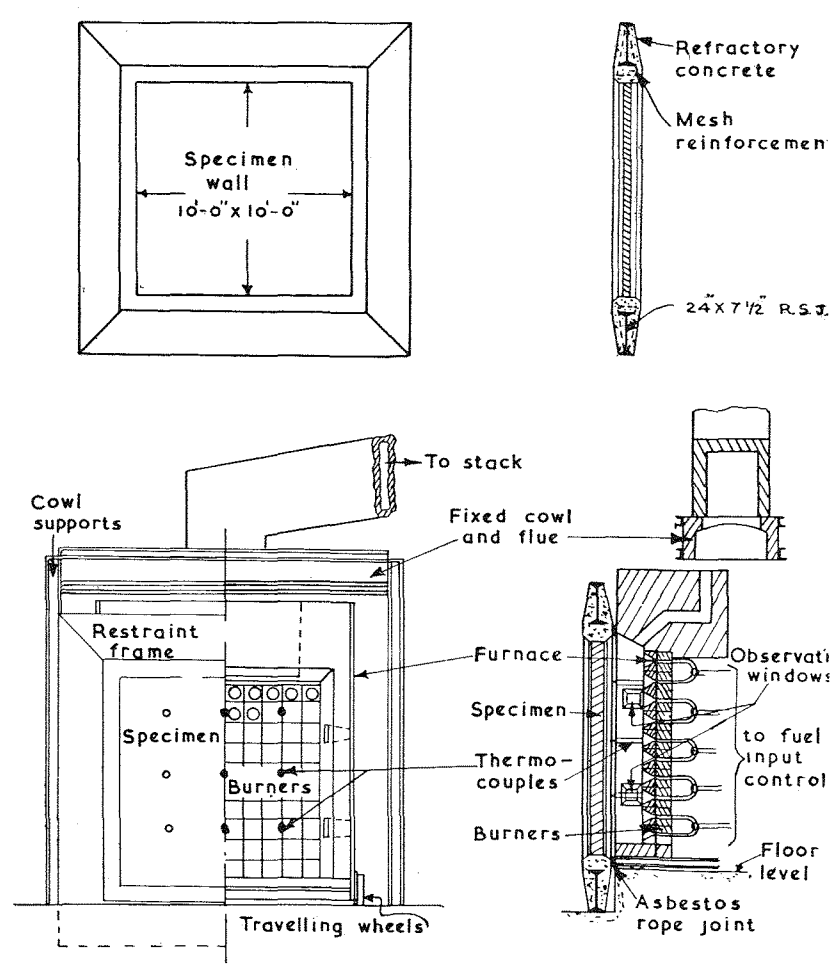

Fig. 2. Furnace testing equipment, showing details of end restraint (ab a half sectional elevation (lower left), and a part sectional side elevatio the furnace closed with the non-loadbearing wall in position ready for test.

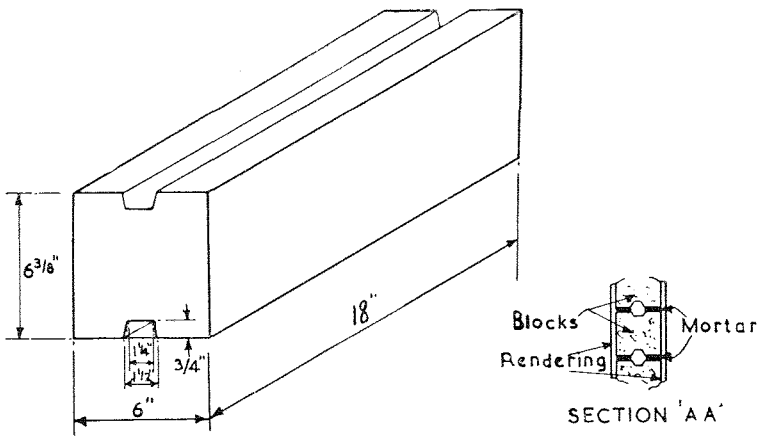

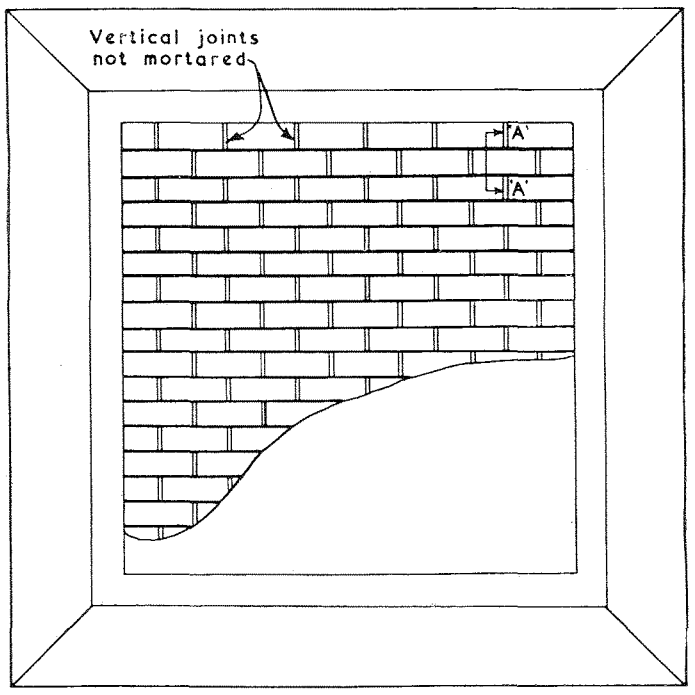

Fig. 3. Detail of one of the blocks, and the form of construction of a wall, partly rendered.

made for the methods of test specified in British Standard 476: 1932.

If British Standard 476: 1953 had been followed for the tests described here, the fire-resistance of only one wall would be changed and that only by a few minutes; specimen No. 4 would be deemed to have failed after 5 hr 14 min instead of 5 hr 2 min, due to higher permitted maximum temperature on the unexposed face.

Test Procedure

The walls were allowed to dry out naturally in the laboratory; they were judged to be in a condition suitable for test when the relative humidity measured on the face of the specimen by form of hygrometer (4) was 80 per cent or less. When 1 test the restraint frame containing the specimen wall wa to face the gas-fired furnace panel shown in Fig. 1, whic cribed in detail elsewhere (2). Furnace temperatures were by means of nine No. 18 s.w.g. chromel-alumel therm arranged symmetrically in three rows of three, and 1 continuously throughout the test. Temperatures of the u face were measured in five standard positions (at the cent area and the centre of each quarter section) by means of

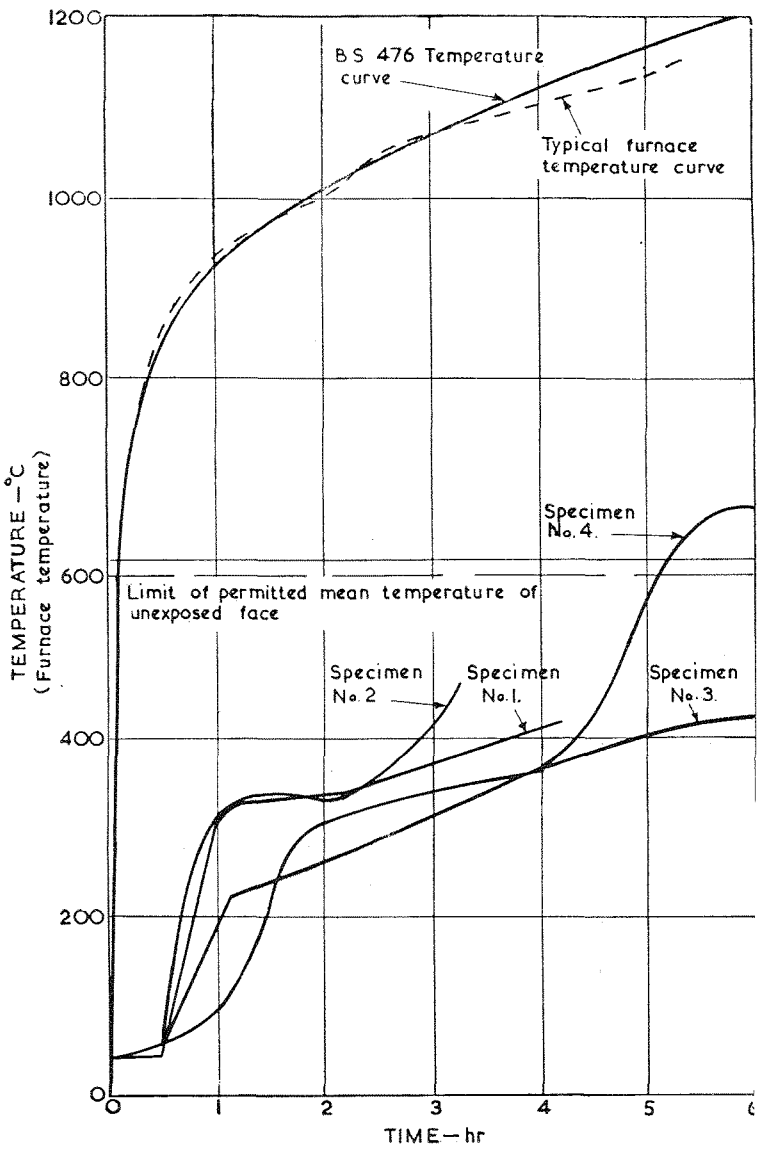

Fig. 5. Temperature curves.

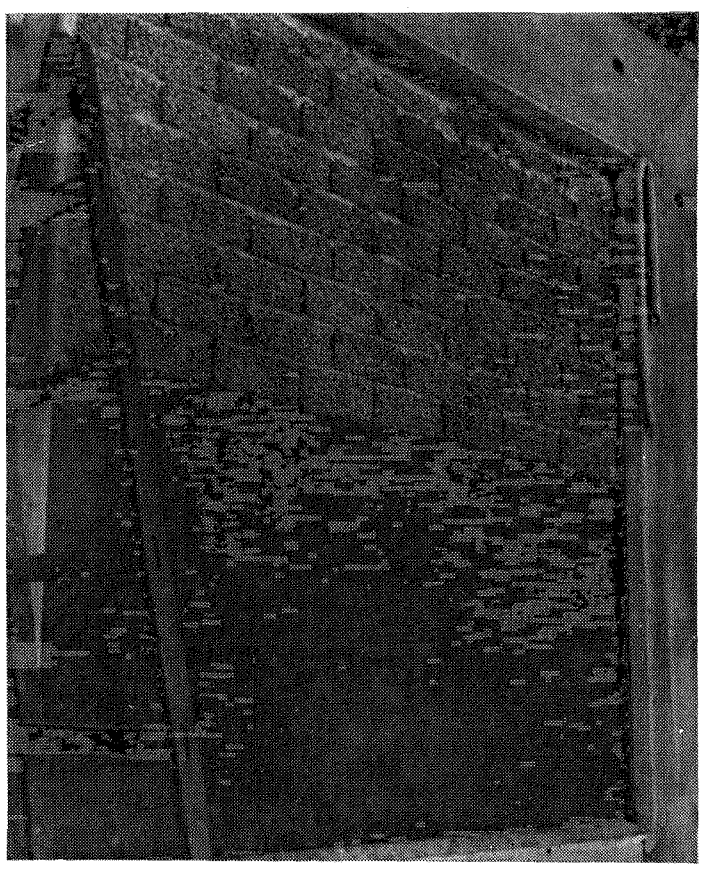

Fig. 4. Partly rendered block wall.

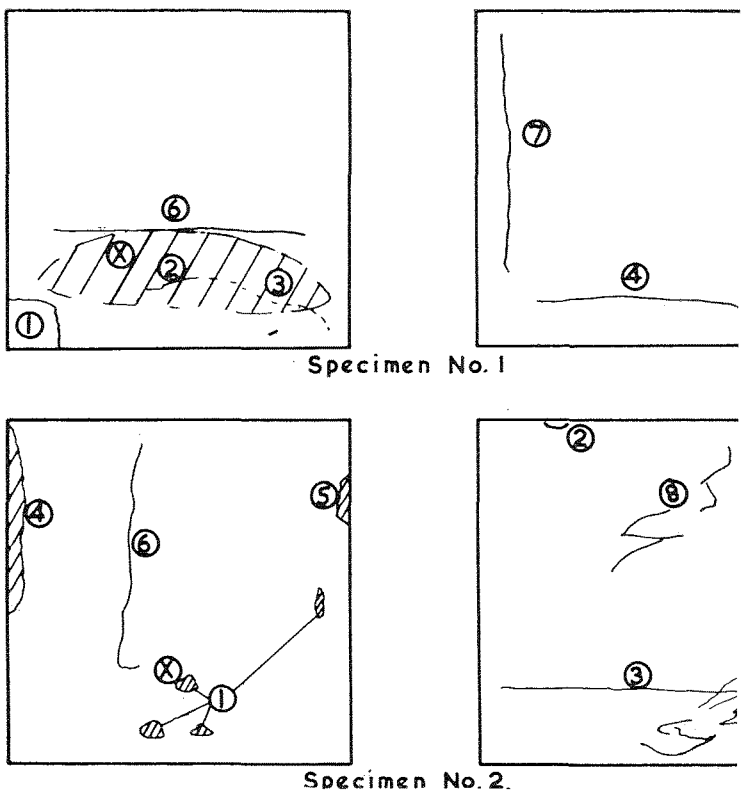

Above: Fig. 6. Observations during test; crushed quartzite specimens. Left: exposed faces. Right: unexposed fac

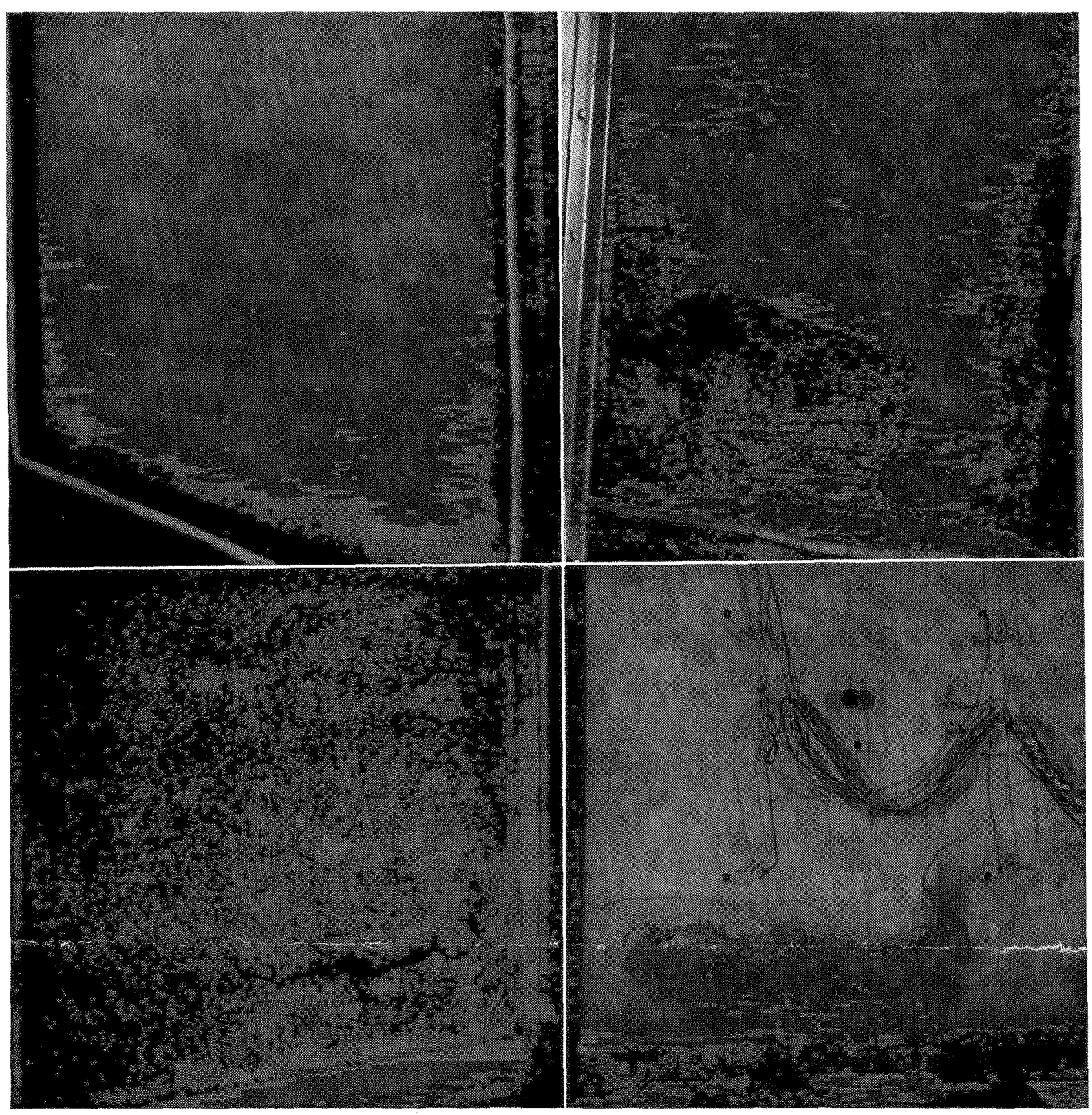

Fig. 7. Specimen No. 1.

(Upper left) Exposed face before test.

(Upper right) Exposed face immediately after end of heating.

(Lower left) Exposed face after water test.

(Lower right) Unexposed face after water test.

s.w.g. copper-constantan thermocouples soldered to thin copper discs which were cemented to the wall. These temperatures were read at intervals during the test. For obtaining information of temperature distribution through the specimens certain walls were provided during manufacture with thermocouples having the hot junctions accurately located at selected points in the thickness.

Deflection of the walls was measured on the unexposed face by means of a scale and a fixed wire stretched between supports on either side of the restraint frame.

A test was considered as starting from the time the lighted furnace panel was in position to enclose completely the exposed face of the specimen. Observations of the behaviour of the specimens were made throughout. Heating was stopped as soon as a wall failed under any of the three requirements of British Standard 476. The furnace panel was then withdrawn and the water jet applied.

Results of Tests

A typical curve of mean furnace temperature is shown in Fig. 5 in comparison with the Standard time-temperature curve of British Standard 476. Curves of mean unexposed face temperature for the individual specimens have been plotted in the same figure. A summary of the results appears in Table II.

Specimen No. 1

Age at rendering—14 days. Age at test—85 days.

Fig. 7 shows the appearance of the wall before and after test. The maximum recorded deflection was $\frac{7}{16}$in towards the furnace.

Observations during test. The first crack in the rendering was observed after 1 hr on the exposed face (1 in Fig. 6). On the unexposed face the first crack (4 in Fig. 6) was noticed at 2 hr. Further cracking occurred until 3 hr 5 min when cracks 6 and 7 appeared. At 3 hr 44 min the rendering bulged in the region cracks 4, 2 and 6 and break-up of the concrete in the lower p of the wall commenced with considerable noise. The render and concrete to a depth of 2 to 3in fell away from the area X the exposed face 6 min later. At 4 hr 8 min rendering fell fr the unexposed face on an area corresponding to X and at 4 14 min a crack formed in the wall through which flame could p Heating was then terminated. The impact test was reapplied w little apparent effect followed by the 4 min water test, wh removed all the rendering and some of the concrete from exposed face.

Specimen No. 2

Block wall in crushed quartzite aggregate. Age at rendering (new blocks)—57 days. Age at test (newest blocks)—87 days.

Observations during test. Cracks appeared early on the expo face and the finish coat rendering fell from small areas (1 in F 6). By 1 hr the finish coat rendering had fallen from a large a in the vicinity of patches 1 and from vertical edges. The und coat rendering had bulged and split at X. During the next 30 m crack 3 appeared on the unexposed face and opened to about $\frac{1}{16}$ On the exposed face a general break-up of the rendering be along the horizontal line through X. At 1 hr 50 min pieces block fell from area X and during the next hour the damage to blocks extended in depth and area. The rendering fell from area of the unexposed face (7 in Fig. 6) at 2 hr 59 min, follov 16 min later by further falls of rendering with some concrete. passage for flame through the wall was then formed by a verti construction joint (Fig. 8b) and the test finished. Fig. 8 a shows the unexposed face during the test at 3 hr and the expo face after the test. The maximum recorded deflection was away from the furnace.

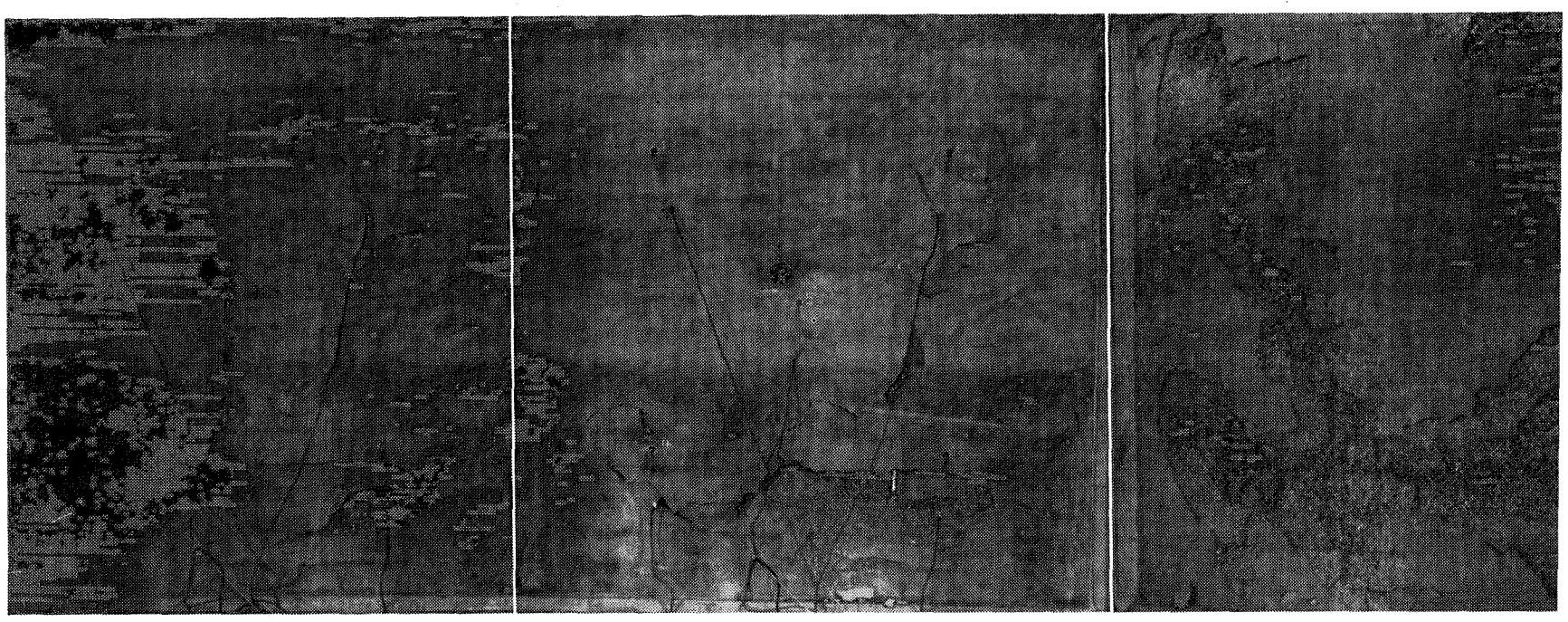

Fig. 8. Specimen No. 2. (Left) Unexposed face after 3 hr. heating. (Centre) Unexposed face after end of heating. (Right) Exposed face of heating.

SPECIMEN NO. 3

Monolithic wall in crushed basalt aggregate. Age at test—112 days. *Observations during test.* During the first 30 min cracks developed on the exposed face with some bulging in region of position 2 in Fig. 9 (above left), and a fall of the finish coat 3 min later. Except for a small fall of finish coat from area 1 on the exposed face no noticeable deterioration was observed in the condition of the wall when heating finished at 6 hr 3 min. The impact test was re-applied with little effect. Application of the water jet for 6 min removed all the rendering and some of the concrete from the exposed face. Fig. 10 shows the appearance of both faces at the end of heating and after the water test. The maximum deflection recorded was $\frac{7}{32}$in away from the furnace.

SPECIMEN NO. 4

Block wall in crushed basalt aggregate. Age at rendering (newest blocks)—41 days. Age at test (newest blocks)—79 days. *Observations during test.* During the first hour of test the only damage observed was crack 1 (Fig. 9 below left) on the exposed face with a slight bulging of the rendering. No further deterioration was visible when failure occurred by local temperature rise on the unexposed face after 5 hr 2 min. Heating was terminated at 5 hr 20 min, after which the impact test was re-applied. Ap of the $5\frac{1}{2}$ min water test removed all the rendering from th face but caused little damage to the blocks. Fig. 11 s appearance of the two faces of the wall after the water tes parative temperatures measured at different points in approximately at the centre of a block and in adjacent ve horizontal joints, are shown in Fig. 12. The maximum recorded was $\frac{1}{4}$in towards the furnace.

Discussion of Results

EFFECT OF TYPE OF AGGREGATE

The type of failure obtained in the fire tests was d by the aggregate used. The quartzite aggregate walls structural break-up of the concrete, while the basalt aggre maintained their integrity until the limiting tempera reached on the unexposed face. This difference in bel explainable by the different thermal expansion of the t gates, in that the stresses induced in the quartzite walls b were greater than in the basalt walls. The coefficient c expansion of silica bearing rocks increases almost linearly silica content. Quartzite with its high silica content has a

TABLE II

SUMMARY OF RESULTS OF FIRE-RESISTANCE TESTS OF NO-FINES CONCRETE WALLS

Specimen	Aggregate	Type of Construction	Average temperature of unexposed face—°C						Fire-Resistance	Mode of Failure	Remark
			1-hr	2-hr	3-hr	4-hr	5-hr	6-hr	hr · min		
1	Crushed Quartzite	Monolithic	78	80	83	103	—	—	4 14	Rendering fallen from both faces of wall revealing horizontal fissure through which furnace was visible from unexposed side	Concrete fell av large area on t side to a maxi of about 4in b test
2	Crushed Quartzite	Block	70	73	77	—	—	—	3 15	Rendering fallen from both faces of wall so that furnace was visible from unexposed side through unmortared vertical construction joint	Concrete fell a several large a exposed side mum depth o before water t
3	Crushed Basalt	Monolithic	23	73	85	87	95	103	No failure after 6 00	—	Only two small rendering fell exposed face from the une before water
4	Crushed Basalt	Block	50	73	80	91	133	—	5 02	Permitted rise of maximum temperature of unexposed face exceeded	Only one sligh peared in th on the expos none fell fron before the wa

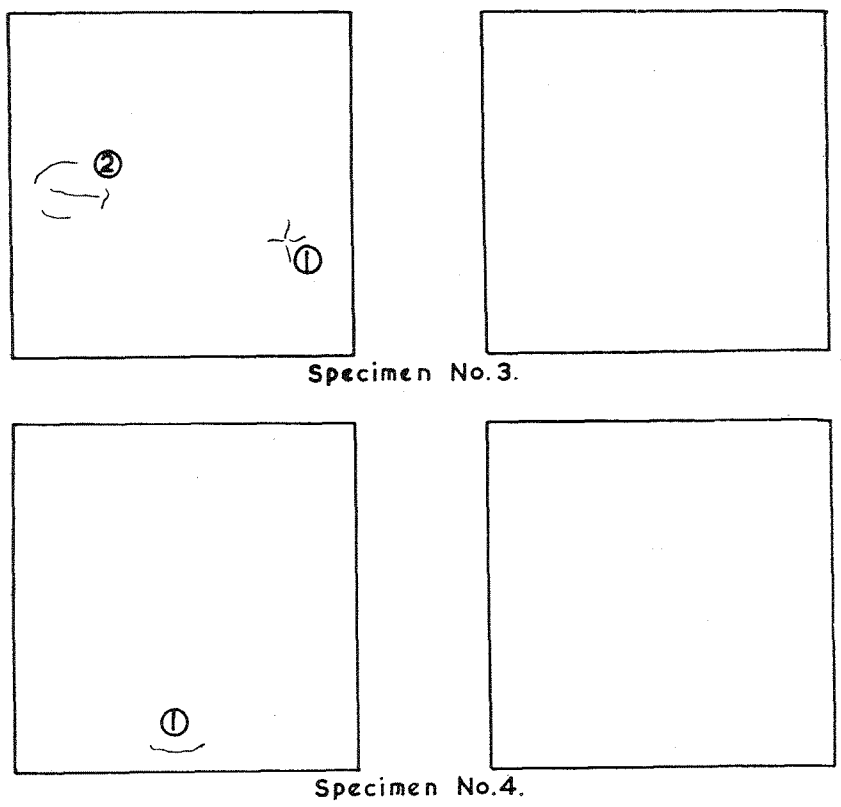

Fig. 9. Observations during test; crushed basalt aggregate specimens. Left: exposed faces. Right: unexposed faces.

of expansion about double that of basalt in the temperature range 0-100 deg C (5), moreover at about 575 deg C, the α/β transformation point for quartz, a marked increase in expansion occurs.

EFFECT OF TYPE OF CONSTRUCTION

The block walls in both types of aggregate were inferio performance to the monolithic walls. In the walls of quart aggregate where the critical factor was the structural failure of concrete, the damage was observed earlier and extended ove greater area in the block walls than in the monolithic walls. T may be attributed to a number of causes, such as differences concrete strength, moisture content of the specimens and in wo manship of the renderings. The consequences of one feature construction in the block wall were apparent; any fall of render from corresponding areas on both faces of the wall would reve fissure through which flame could pass. In the monolithic w however, a fissure would not develop in the concrete until c siderable damage had been sustained. This weak point in block construction could be easily overcome by modifying design so that the vertical joints were mortared in the same way the horiztonal joints.

In the basalt walls, the critical factor was heat transmissi Temperature measurements were made by means of thermocou at the points in the blocks and joints shown in Fig. 12. Hig temperatures were obtained at any given time in the joints thar the concrete, indicating that heat transfer through a monoli wall would be lower than through a block wall.

EFFECT OF MOISTURE CONTENT

Since no means were available to condition the specimen w to a predetermined moisture content, there was necessarily s variation in the amount of water in the walls at the time of t In general, the walls when tested were in equilibrium with atmosphere of the test building. It would appear that the b

Fig. 10. Specimen No. 3.

(Upper left) Exposed face at end of heating.

(Upper right) Unexposed face at end of heating.

(Lower left) Exposed face after water test.

(Lower right) Unexposed face after water test.

wall of quartzite had a higher moisture content than the monolithic wall of the same aggregate, but for the basalt walls the reverse obtained. This would explain the differences in the unexposed face temperatures, but no quantitative data on the amount of water evaporated can be given.

Effect of Renderings

For cement : lime : sand renderings, ½in can be regarded as the minimum thickness which should be applied to obtain the performance of these tests. There is evidence that an increase in the thickness of the renderings will make little difference to the fire-resistance.

No tests were made on walls finished with gypsum plaster instead of cement : lime : sand, but the results of tests on other types of construction where a comparison has been made show that gypsum is not likely to be inferior in performance.

Deflection of Walls

The method used for measuring the lateral deflection of the walls, gave the total movement of the rendering on the unexposed face and not the true displacement of the wall, if any relative movement occurred between wall and rendering. From comparisons between the actual displacement measurements and the observed behaviour of the rendering, it is estimated that at no time did the lateral deflection at the centre of any of the four walls exceed ½in.

Conclusions

Restrained walls 6in thick of no-fines concrete made from natural aggregates representative of the high and low silica content rocks and rendered on both faces have been shown to possess a fire-resistance which is sufficient for most classes of buildings, and compares favourably with the ratings obtained by other types of construction. For example, clay brick walls 4¼in thick, plastered ½in on each face, are rated as constructions of 2-hr fire-resistance.

The walls of low silica aggregate were superior to the corresponding constructions of high silica aggregate. A lower fire-resistance was obtained for the block wall of either aggregate than for the corresponding monolithic wall.

It is reasonable to assume that the fire-resistance of n concrete walls of similar construction to those tested, but different aggregates, would not be less than that of the qu specimens.

Acknowledgments

The work described in this paper forms part of the prog of the Joint Fire Research Organisation of the Departm Scientific and Industrial Research and Fire Offices' Com the paper is published by permission of the Director o Research.

BIBLIOGRAPHY

(1) "The use of no-fines concrete in single storey domestic bui *Australia Department of Local Government Standard Spec* No. 2, 1946.

(2) Davey, N. and Ashton, L. A. "Investigations on building fire V. Fire tests on structural elements." *National Building Research Paper,* No. 12, London, 1953. H.M. Stationery Office

(3) Ashton, L. A. "The fire-resistance of prestressed concrete *Civ. Eng. & P.W. Rev.,* Vol. 46, pp. 940-3, 1951.

(4) Bonnell, D. G. R. and Watson, A. "Chemical attack on oi applied to plasterwork." *Jrnl. Soc. Chem. Ind., Lond.,* Vol. 183-9, 1938.

(5) Griffith, J. H. "Thermal expansion of rocks." *Iowa Eng Experimental Station Bulletin,* 128.

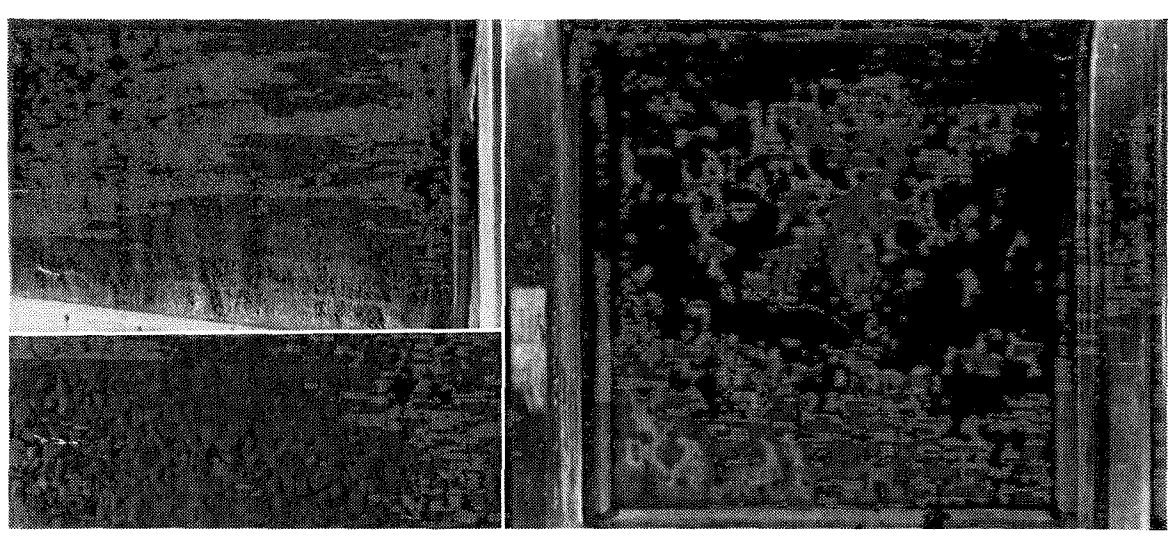

Fig. 11. *Specimen No.* 4. *(Upper left) Exposed face after water test, with (lower left) close-up of face. (Right) Unexposed face immediately after water test.*

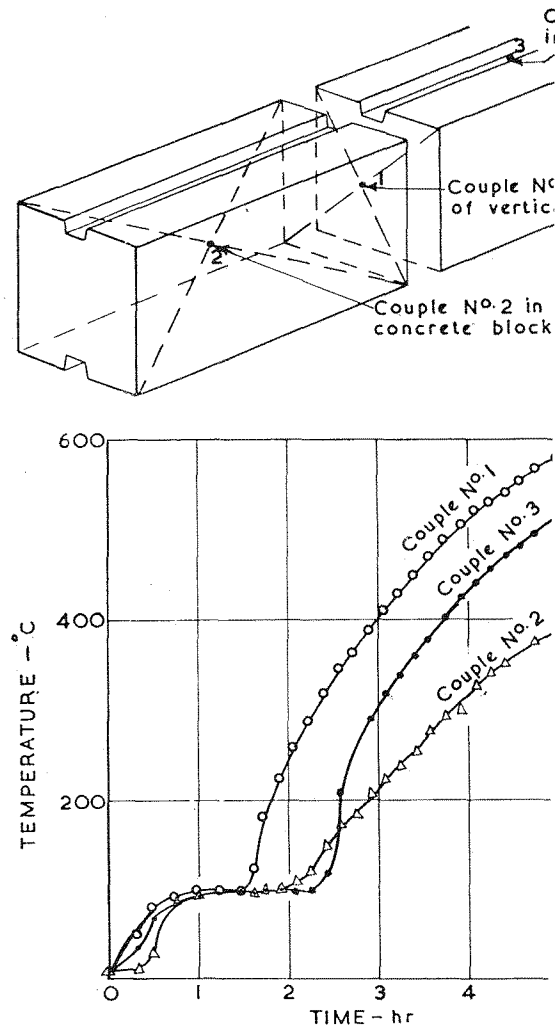

Fig. 12. *Specimen No.* 4 *(Above) Pos thermocouples in blocks. (Below) Con temperatures within block wall.*

Printed by Cockayne & Co., Ltd., London, S.E.1, England.